Whitehaus®

LU044

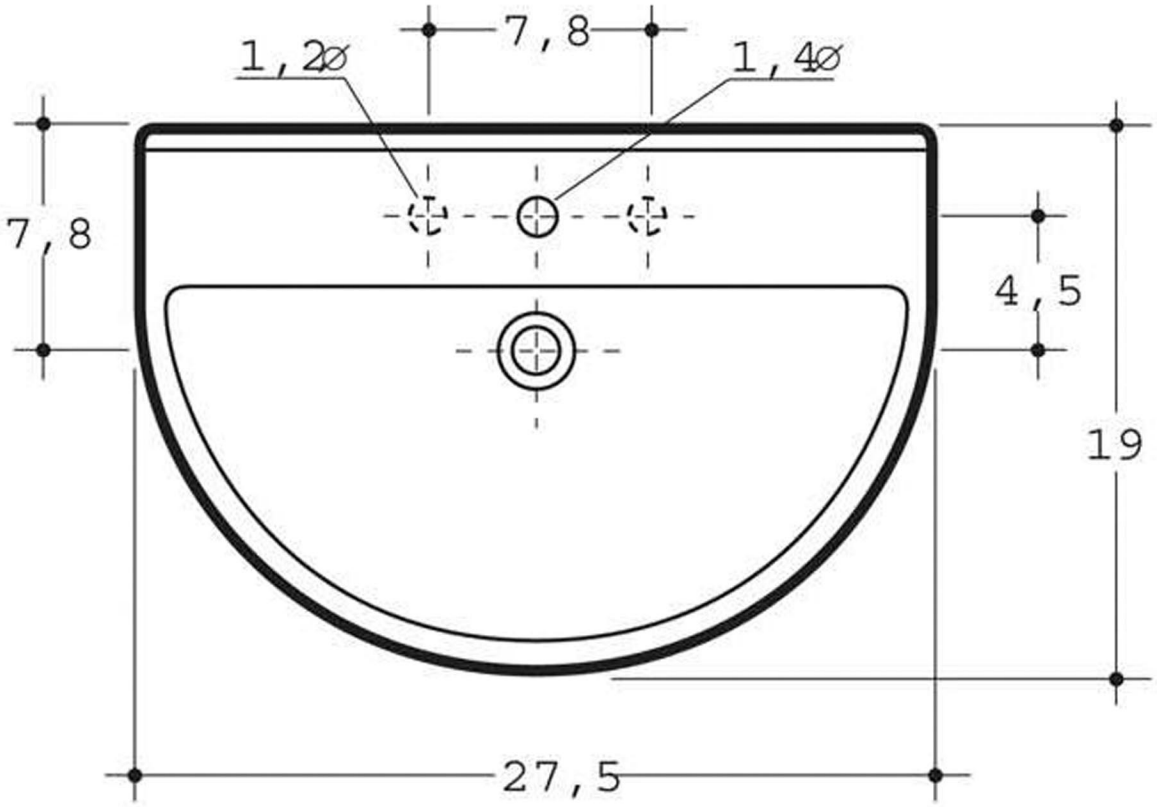

Inside Dimensions:
25 1/4" x 12 1/2" x 4 3/4"
Overall Depth:
6 1/8"

LIVE WITH STYLE!

P.O. Box 26064, West Haven, CT USA 06516 • [P]: 203.479.8466 • [F]: 203.479.8477
[Toll Free Phone]: 800.527.6690 • [Toll Free Fax]: 800.694.4837 • info@WhitehausCollection.com