80610-xx Shower Only Trim

Description

- Tub & shower trim kit
- "CARMEL (80)" metal lever handle
- 3 1/2" Face Shower head
- 3 Settings shower head
- 1.5 GPM ASME compliant
- VALVE SOLD SEPARATELY

Standards

- Complies with IAPMO UPC/cUPC
- ADA Accessibility Guidelines for Buildings and Facilities - 4.27.4 Controls and Mechanisms
- CALGreen compliant

• 80610-xx

Colors / Finishes

01 - Chrome
72 - Satin Nickel
20 - Antique Bronze

BREAK DOWN

Component Parts List

NO.	Part No	Qty 80610	Qty 80630
01	CTCT0043	1	1
02	CTPB0470	1	1
03	ATBE0125	1	1
04	CTHZ0288	1	1
05	CTST4101	1	1
06	CTST0117	1	1
07	CTCZ0162	1	1
08	CTCP0192	1	1
09	CTCT0053	1	1
10	CTCP0293	1	1
11	CTRR0123	1	1
12	CTWR0063	1	1
13	CTST0230	2	2
14	CTKP0102	1	1

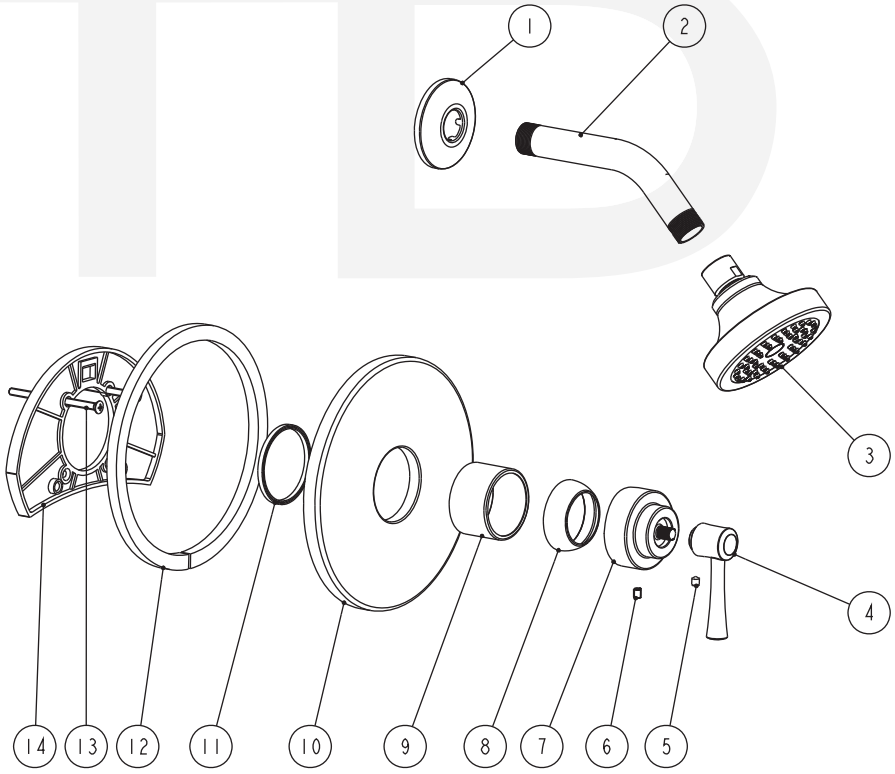

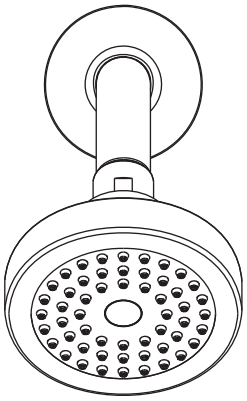

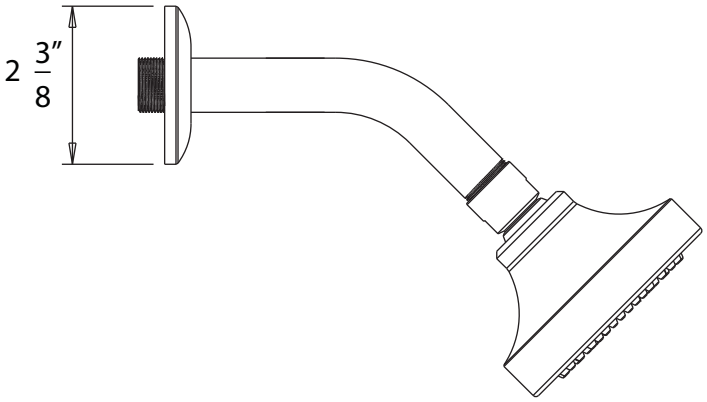

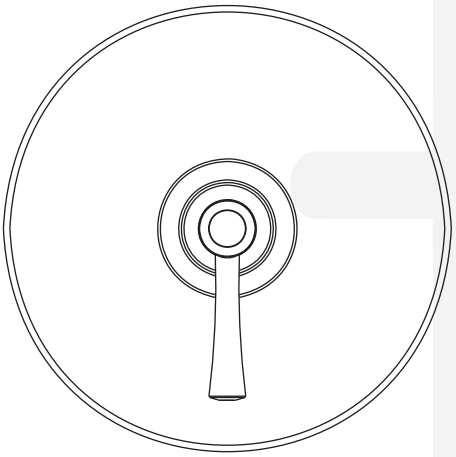

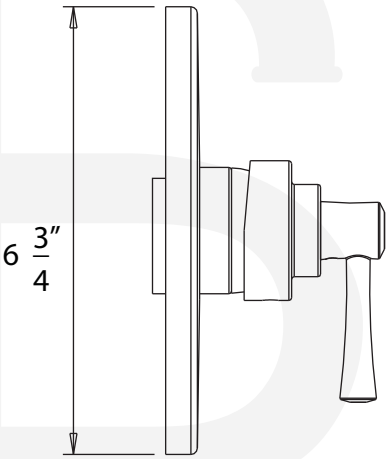

Item Number	Type	Date
80610-xx	Shower Only	3/9/2011