41991-xx - Drinking Faucet

Description

- Lever handle
- Classical drinking faucet
- 360 deg swing angle, tubular spout
- 90 deg turn ceramic disc cartridges
- 1/4" NPSM connections
- California AB1953 compliant

Standards

- Complies with IAPMO UPC/cUPC
- California AB1953 compliant
- ADA Accessibility Guidelines for Buildings and Facilities - 4.27.4 Controls and Mechanisms

Colors / Finishes

01 - Chrome
12 - Satin Nickel
20 - Antique Bronze

• 41991-xx

BREAK DOWN

Component Parts List

No.	Description	Qty
01	Aerator assembly	1
02	Spout	1
03	Spout ring	1
04	O-Rings	2
05	O-Ring	1
06	Base Ring	1
07	Washer	1
08	Nut	1
09	Washer	1
10	Nut	1
11	Handle	1
12	Handle escutcheon	1
13	Faucet Body	1
14	Shank	1

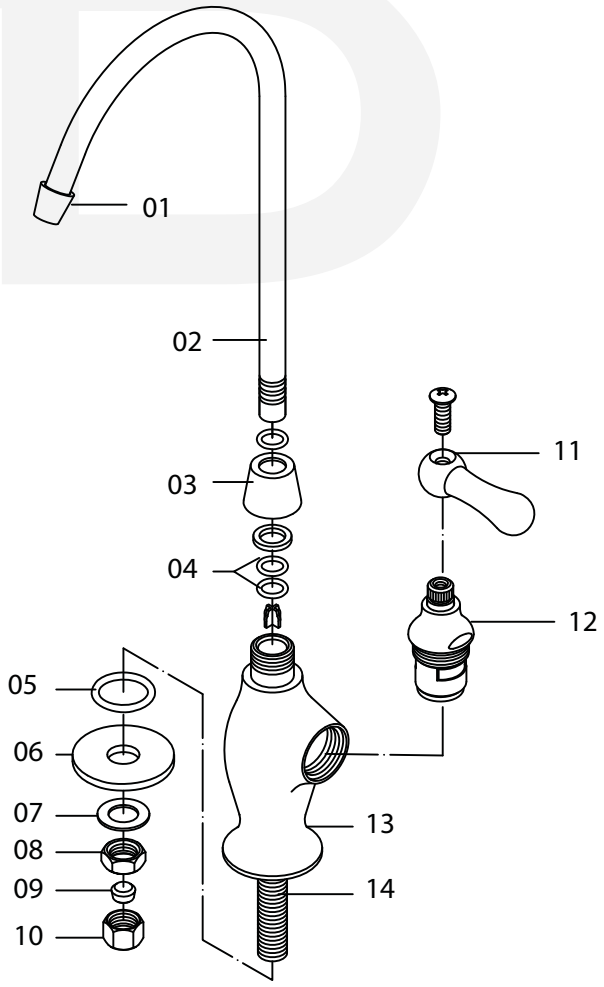

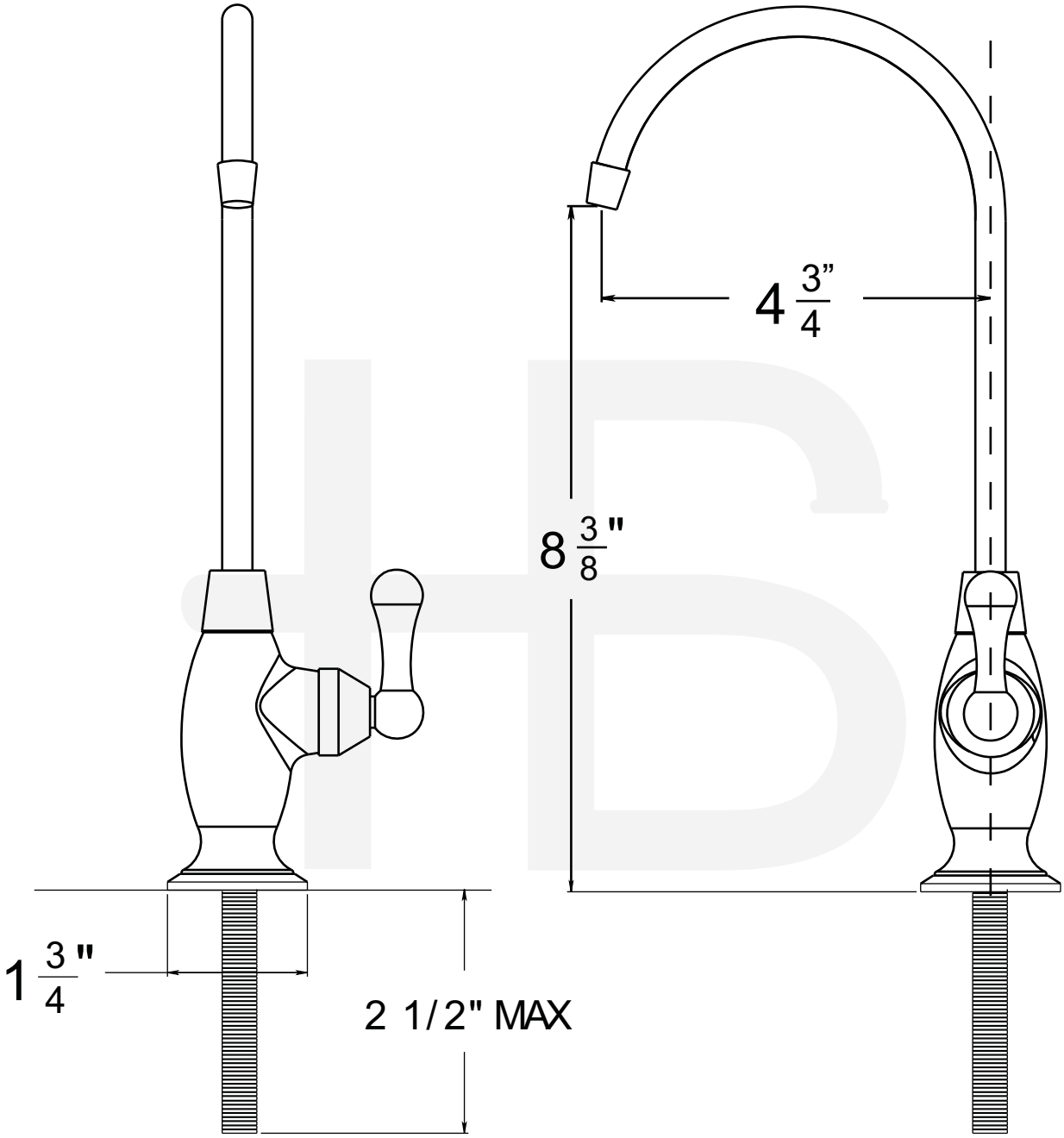

Item Number	Type	Date
41991-xx	DRINKING FAUCET	7-11-2011