41990-xx - Drinking Faucet

Description

- Lever handle
- Contemporary drinking faucet
- 360 deg swing angle, tubular spout
- 90 deg turn ceramic disc cartridges
- 1/4" NPSM connections
- California AB1953 compliant

Standards

- Complies with IAPMO UPC/cUPC
- California AB1953 compliant
- ADA Accessibility Guidelines for Buildings and Facilities - 4.27.4 Controls and Mechanisms

Colors / Finishes

01 - Chrome
12 - Satin Nickel
20 - Antique Bronze

• 41990-xx

BREAK DOWN
Component Parts List

No.	Description	Qty
01	Aerator assembly	1
02	Handle	1
03	Handle cap	1
04	Spout	1
05	O-rings	2
06	Faucet Body	1
07	Shank	1
08	Base ring	1
09	O-ring	1
10	Retaining ring	1
11	Retaining washer	1
12	Nut	1
13	Gasket	1
14	Nut	1

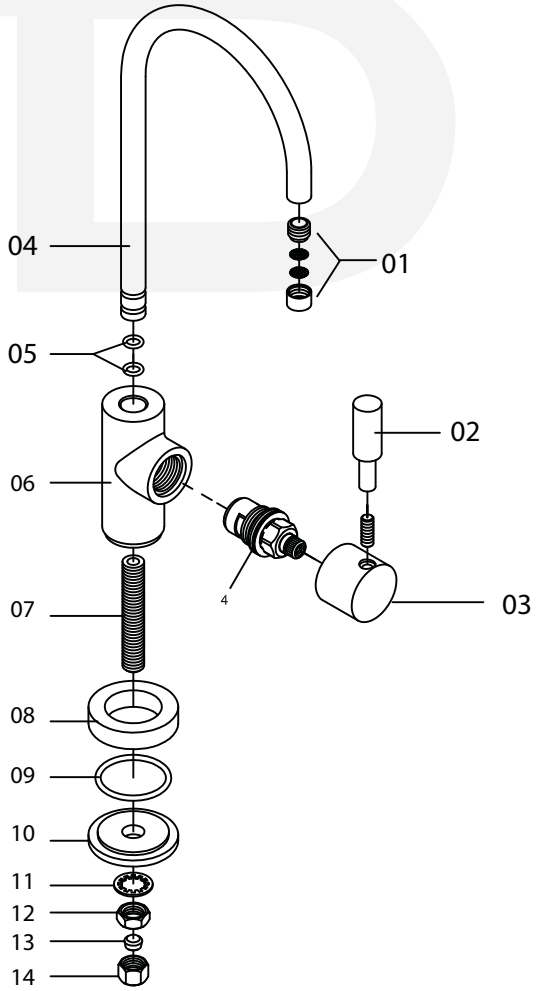

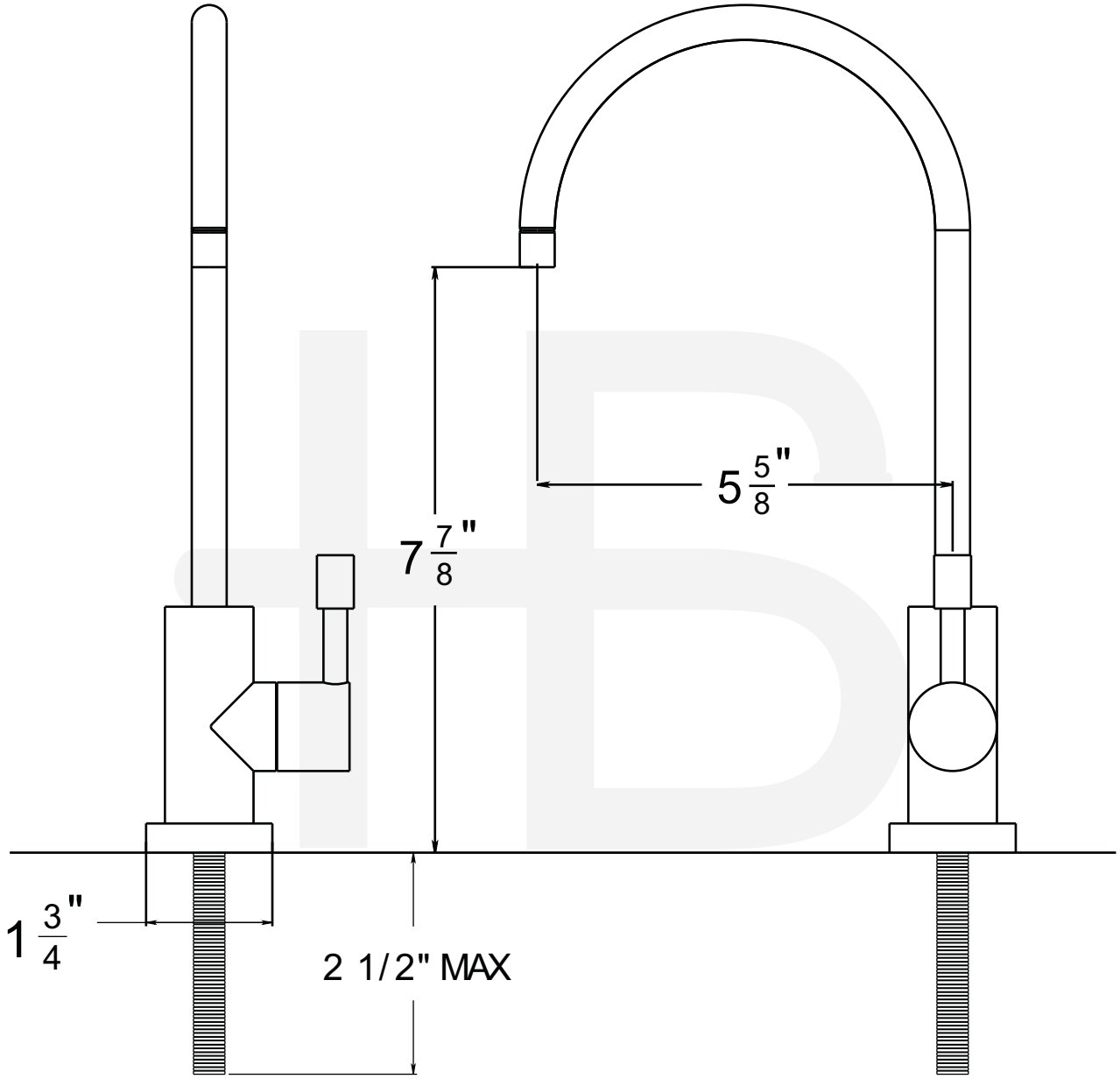

Item Number	Type	Date
41990-xx	DRINKING FAUCET	7-11-2011