12610-xx - Shower Only

Description

- Shower trim kit
- "Reliaflo" metal lever handle
- 1 setting shower head
- 1.5 GPM ASME Compliant
- VALVE SOLD SEPARATELY

- 12610-xx

Standards

- Complies with IAPMO UPC/cUPC
- ADA Accessibility Guidelines for Buildings and Facilities - 4.27.4 Controls and Mechanisms
- CALGreen compliant

Colors / Finishes

01 - Chrome
72 - PVD Satin Nickel

BREAK DOWN

NO.	Part No	Qty 12610	Qty 12630
01	CTCT0043	1	1
02	CTPB0470	1	1
03	ATBE0094	1	1
04	CTHZ0312	1	1
05	CCQT0002	1	1
06	CTST4101	1	1
07	CTCP0192	1	1
08	CTCT0053	1	1
09	CTST0230	2	2
10	CTCT0052	1	1
11	CTWP0223	1	1
12	CTWP0192	1	1

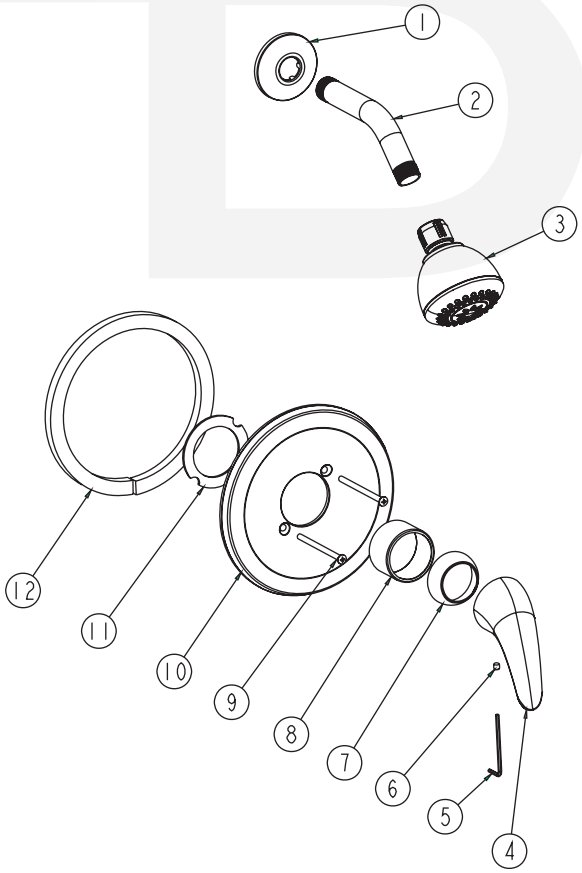

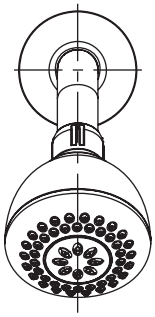

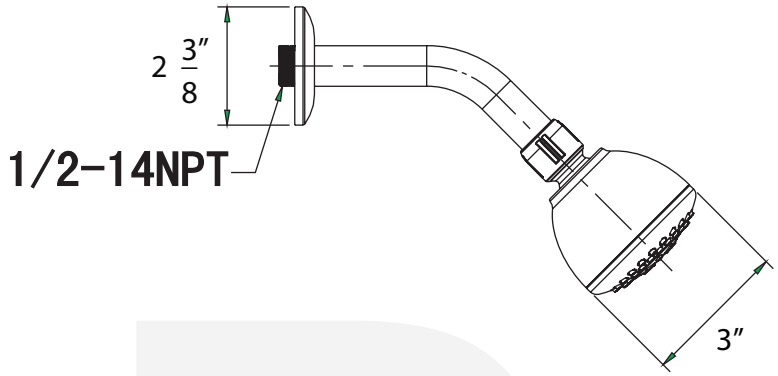

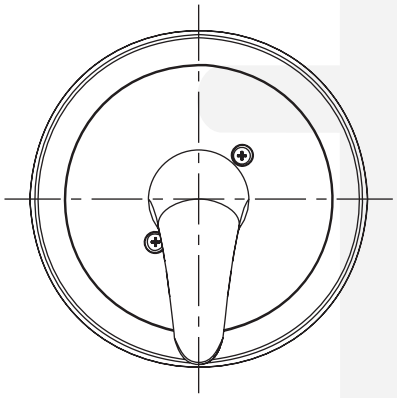

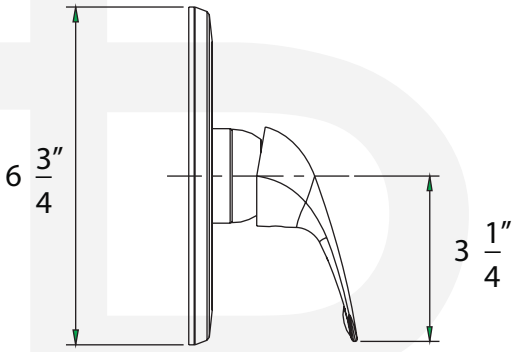

Item Number	Type	Date
12610-xx	Shower Only	3/23/2011